Manual Butterfly Valve

Product Overview

A manual butterfly valve is a pipeline flow control device that achieves rapid opening and closing through a 90° rotation of a disc-shaped butterfly plate. It is widely used in systems involving pipelines. This valve features a simple and compact design, is small in size and lightweight, supports wafer-type and flanged connections, and can be installed in any position. It is equipped with various elastic seal options—such as EPDM, NBR, and PTFE—or metal seals, ensuring reliable sealing performance, low operating torque, and easy maintenance. Manual butterfly valves offer minimal flow resistance when fully open and provide sensitive flow regulation within an opening range of 15° to 70°, making them an ideal pipeline control solution that combines both shutoff and regulation functions.

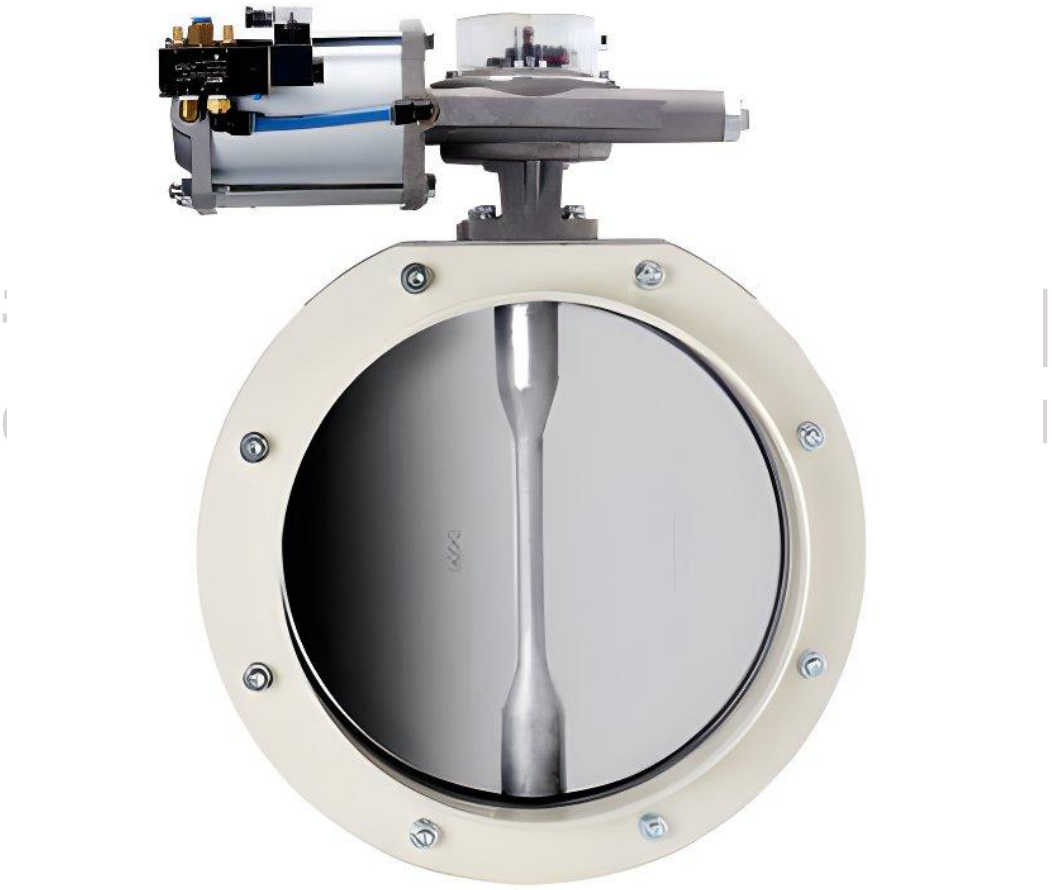





Technical Specifications

Nominal Diameter DN	DN40 → DN3000	Commonly used sizes range from DN50 to DN1200; large-diameter sizes can reach DN2000 to DN3000
Nominal Pressure PN	PN 0.6 MPa → PN 4.0 MPa	Corresponds to U.S. standards Class 150 / Class 300; standard PN1.0, PN1.6
Operating Temperature	-40°C (low-temperature type) → +425°C (metal hard seal)	Soft seal: -10 to 120°C; PTFE: -20 to 180°C; Hard seal: -29 to 425°C
Valve Body Material (Temperature and Pressure Resistance: Low → High)	Cast iron HT200 → Ductile iron → Carbon steel WCB → Stainless steel 304/316	Selecting a Model Based on the Corrosiveness of the Medium and Pressure and Temperature Conditions
Seal Material (Temperature Resistance: Low → High)	Nitrile rubber (NBR) 80°C → Ethylene-propylene rubber (EPDM) 120°C → Fluorinated rubber (FKM) 200°C → PTFE 260°C	Soft seal (rubber/PTFE) or metal hard seal
Connection Types (Pressure Rating: Low → High)	Clamp-on → Flanged → Butt-welded	Clamp-type connections are economical and compact; flanged connections facilitate maintenance; butt-welded connections are used for high-temperature, high-pressure applications.
Drive Type	Electric → Pneumatic → Manual	Select Based on the Level of Automation and Energy Conditions
Actuator Voltage (Electric Butterfly Valve)	AC 380 V → AC 220 V → DC 24 V	
Air Supply Pressure (Pneumatic Butterfly Valve)	0.7 MPa → 0.4 MPa	

青岛铨航机械设备有限公司
Qingdao Quanhang Machinery Co., Ltd

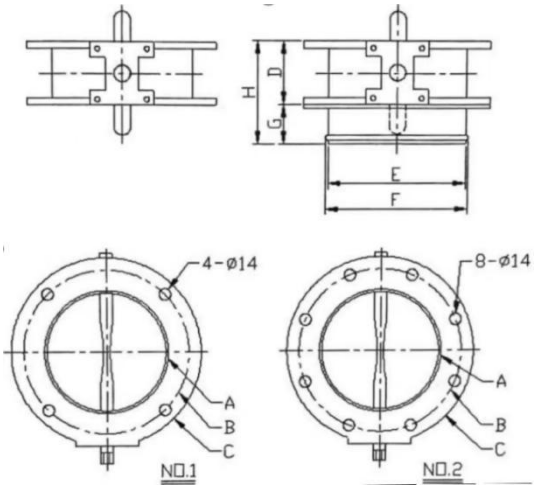

Dimension Specifications Table

Model No.	NO	A	B	C	D	E	F	G	H	Weight/Kg
SD100	1	100	180	220	77	100	104	48	125	7.3
SD150		150	200	230	77	160	170	48	125	9
SD200		200	250	280	77	210	220	48	125	11.5
SD250	2	250	300	330	77	260	270	48	125	13
SD300		300	350	380	77	310	320	48	125	15
SD350		350	400	440	84	360	370	48	132	24.5
SD400		400	470	530	84	410	420	50	134	32.5

Key Benefits and Features of the Product

青岛锚航机械设备有限公司
Qingdao Quanhang Machinery Co., Ltd

Cost and Reliability

Simple design; lowest procurement and maintenance costs

No reliance on power or compressed air; operation is not affected by power or air supply outages

Few potential failure points; long-term maintenance-free operation

Operation and Application

Intuitive operation via a handle or worm gear; valve opening is visible

Suitable for large-diameter, low-frequency opening and closing applications

The top choice for non-powered environments, such as those involving flammable or explosive materials

Installation and Compatibility

Compact, lightweight, and requiring minimal installation space

Can be connected to various types of flanged or wafer-type pipes

The worm gearbox can be equipped with mechanical stops and a position indicator

Applications

Basic and Heavy Industry: Used to control various process media in industries such as metallurgy, mining, building materials, and power generation. For example, in thermal power plants, they are widely used for flow control in cooling water systems.

Petroleum and Chemical Industries: This is the core application area, where these valves are used to control pipelines carrying petroleum, coal gas, natural gas, and various corrosive chemical media (such as sulfuric acid, nitric acid, hydrochloric acid, phosphoric acid, and alkaline solutions).

Light Industry and Textiles: They play a role in fluid conveyance and process control in industries such as papermaking and light textiles.

Water Supply, Drainage, and Water Treatment: They serve as critical control equipment in municipal engineering projects such as urban water supply and drainage, as well as wastewater treatment.

Fire Protection Systems: Used as reliable shut-off and regulating valves in fire protection water supply networks at industrial sites.

District Heating: Widely used in district heating pipeline networks.

青岛铨航机械设备有限公司
Qingdao Quanhang Machinery Co., Ltd

HVAC Systems: Used to regulate the flow of chilled water and cooling water in building HVAC water systems.

Industrial Refrigeration: Indispensable in refrigeration applications such as ice storage air conditioning systems and chilled water systems.

Food and Pharmaceuticals: Designed to meet hygiene requirements, they are suitable for production piping in the food, pharmaceutical, brewing, and dairy industries.

Energy and Gas: Used for the transmission and control of energy gases such as coal gas and natural gas.

Powders and Granules: They can also be used in piping systems for special media such as solid powders and semi-fluids.

Sulfuric Acid Industry: Manual butterfly valves are among the preferred valve types for critical process sections in sulfuric acid production lines, including gas piping, sulfur burning, conversion, and dry absorption.

Ventilation and Environmental Protection: Used to regulate flow or shut off airflow in dust-laden gas pipelines for industrial ventilation and environmental dust removal.

Marine Industry: They are also used in various fluid systems on ships.

Why Choose Us?

Expert Technical Team: Over 10 years of experience in R&D of mixing equipment, providing customized solutions

Quality Assurance: Rigorous quality control system; ISO 9001-certified company

After-Sales Service: Global service network, 24-hour response, and lifetime technical support

Success Stories: Serving over 500 companies across more than 20 countries and regions

FAQ

1.

Q: What is the minimum order quantity for your products?

A: For larger equipment such as mixers, our minimum order quantity is one unit; for smaller products such as valves and fittings, the minimum order quantity ranges from 50 to 100 pieces. Please contact our sales representatives to confirm the specific minimum order quantity.

青岛铨航机械设备有限公司
Qingdao Quanhang Machinery Co., Ltd

2.

Q: From which port do you ship?

A: Since our company is located in Qingdao, most of our shipments depart from the Port of Qingdao.

3.

Q: Are you a factory or a trading company?

A: We are a manufacturing company with our own factory; all our equipment is produced in our factory's production lines.

4.

Q: What is the difference between a butterfly valve and a gate valve?

A: Butterfly valves feature a rotary design; they are compact, lightweight, open and close quickly, and are cost-effective, making them suitable for large-diameter, low-pressure

applications. Gate valves feature a linear lifting design; they offer better sealing performance and lower flow resistance, but are bulky, more expensive, and open and close more slowly, making them suitable for small-diameter, high-pressure applications or situations requiring full bore.

5.

Q: What is the difference between a butterfly valve and a ball valve?

A: Ball valves offer excellent sealing performance and can shut off media containing particles, but they are costly for large-diameter applications. Butterfly valves offer far better value for money than ball valves for large-diameter applications, but their sealing and shutoff performance is slightly inferior to that of ball valves for small-diameter applications. Butterfly valves are preferred for large-diameter applications, while ball valves are preferred for small-diameter applications where high sealing performance is required.

6.

Q: How do you choose between manual, pneumatic, and electric butterfly valves?

A: For non-powered, low-frequency, or explosion-proof applications, prioritize manual valves; for applications requiring rapid remote automation or involving flammable or explosive substances, prioritize pneumatic valves; for applications requiring precise control, integration with a bus system or PLC, or in locations without a compressed air supply, prioritize electric valves.

7.

青岛铨航机械设备有限公司
Qingdao Quanhang Machinery Co., Ltd

Q: What is the nominal diameter range for butterfly valves?

A: Typically, DN40–DN3000. Common sizes range from DN50 to DN1200, while large-diameter valves for water treatment plants, utility tunnels, and similar applications can reach DN2000–DN3000.

8.

Q: Do butterfly valves have high flow resistance?

A: No, it is very low. When the disc is fully open, it is almost flush with the pipe, resulting in a low flow resistance coefficient. They offer better energy efficiency than gate valves or globe valves and are suitable for high-flow applications.

9.

Q: Do butterfly valves require routine maintenance?

A: Yes. Periodically inspect the sealing surfaces and packing/shaft seals for leaks; clean the air supply for pneumatic components; and check the limit switches and signals for electric components. For soft seals, prevent dry friction and scratches caused by contaminants.

10.

Q: How should I troubleshoot a malfunctioning pneumatic butterfly valve actuator?

A: First, check the air supply pressure and ensure the piping is not blocked or leaking. For single-acting valves, check the spring; then inspect the solenoid valve and limit switches. It is recommended to install a handwheel mechanism to allow for manual operation in the event of a malfunction.

11.

Q: What parameters are needed to select a butterfly valve?

A: Medium and its characteristics, temperature, pressure, nominal diameter (DN), connection type, actuation method, voltage/air supply, leakage class, installation environment (explosion-proof/protection), and standard requirements.

青岛铨航机械设备有限公司
Qingdao Quanhang Machinery Co., Ltd