Strain Gauge Sensor

Product Overview

A strain gauge sensor is a high-precision device for measuring mechanical quantities based on the resistive strain effect. It is widely used in industrial weighing, structural health monitoring, and materials testing. Featuring a fully stainless-steel sealed design, combined with temperature compensation technology and digital signal processing, this product enables precise measurements at the microstrain level and offers excellent long-term stability, making it suitable for harsh industrial environments.



Technical Specifications

Rated Load	0.1, 0.15, 0.2, 0.25, 0.3, 0.5, 0.75, 1, 1.5, 2, 2.5 t	Output Impedance	352±3Ω
Accuracy class	C2–C3	Insulation Resistance	⩾5,000 M Ω
Sensitivity	0.1~0.3t: 2.0+0.002mV/V 0.5~2.5t: 3.0+0.003mV/V	Rated Temperature	-10 to +40°C
		Operating Temperature Range	-30 to +70°C
Linear error	±0.03% F.S.	Safe Load	150% F.S.
Hysteresis error	±0.03% F.S.	Destructive Load	200% F.S.
Creep (30 minutes)	±0.02% F.S.	Rated Excitation Voltage	10–12 V DC
TC ZERO	±0.02% F.S./10°C	Seal Rating	IP67 (0.1–0.75 t) IP68 (1–2.5 t)
TC SPAN	±0.02% F.S./10°C	Materials	Alloy Steel
Input Impedance	400±20Ω	Cable	Length: 1.5 m to 3 m; Scale: 1:1

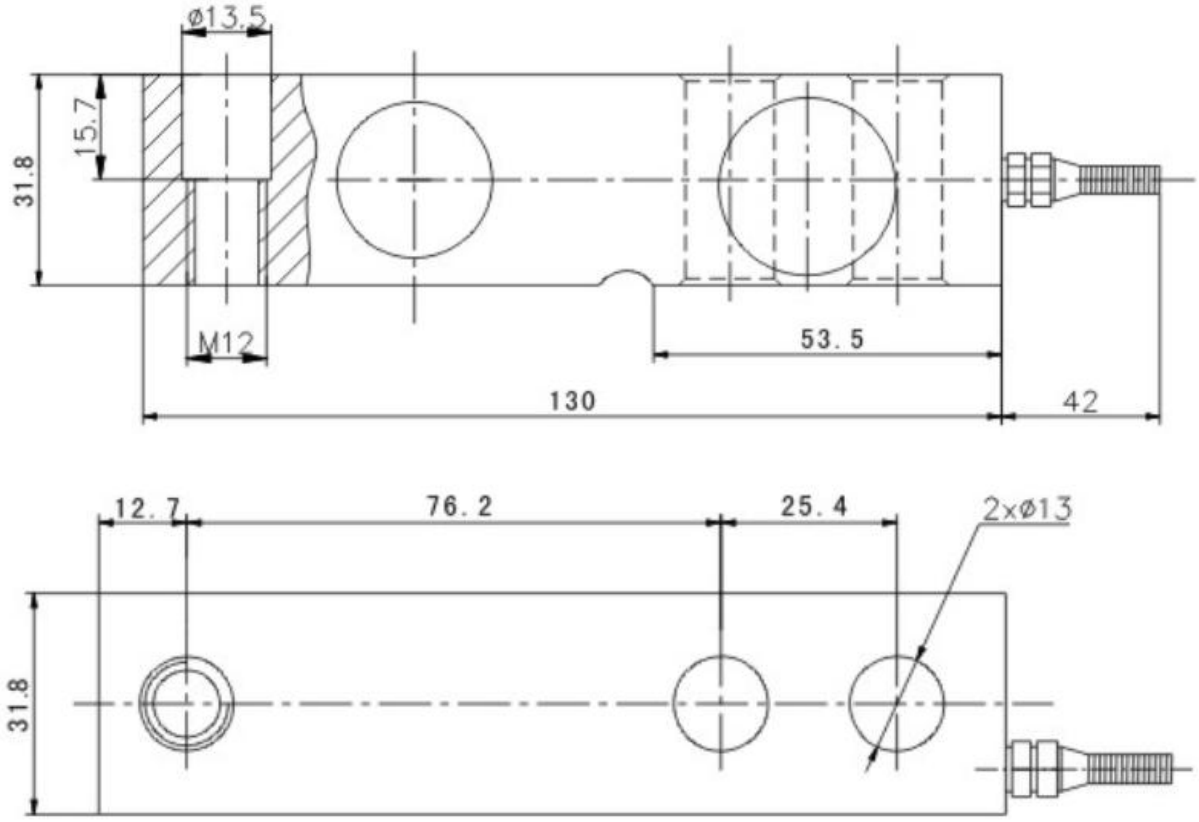

Key Benefits and Features of the Product

Principles of Shear Stress Measurement: High Precision and High Stability

Using shear stress measurement (as opposed to traditional bending stress), the output signal exhibits good symmetry during loading and deformation, effectively eliminating errors caused by eccentric loads. The total error is as low as ±0.05% FS, and its C5 accuracy class meets the requirements for trade-grade weighing.

青岛全航机械设备有限公司
Qingdao Quanhang Machinery Co., Ltd

Technical Advantages:

Blind-hole load-bearing design ensures automatic centering under load

Minimal corner errors ensure good consistency in scale assemblies

Excellent creep performance, with a 30-minute creep rate of ±0.02% FS

Available in two materials, suitable for a variety of operating conditions

Nickel-Plated Alloy Steel Model: High strength and good toughness, with a nickel-plated surface for rust and corrosion resistance—the top choice for value.

Stainless Steel Model: Made entirely of stainless steel or featuring a stainless steel housing, it is resistant to oil, water, and common corrosive gases and media, making it suitable for

applications with high hygiene requirements, such as the food, medical, and pharmaceutical industries.

IP67/IP68 High Protection Rating

IP67 (250 kg–750 kg): Completely dustproof; can withstand brief immersion in water.

IP68 (1 t–10 t): Completely dustproof; can withstand prolonged immersion in water (2 m depth, 168 hours).

Fully sealed welded construction; internal strain gauges are completely isolated from the external environment. Suitable for harsh industrial environments such as those with moisture, dust, and oil, and can be directly washed with high-pressure water.

Low installation height, suitable for compact spaces

The single-cantilever beam structure features an ingenious design with an overall height significantly lower than that of column-type sensors, making it particularly suitable for applications with limited installation space—such as low-platform scales, reactor weighing, and hopper scales—and greatly reducing the overall height requirements for the equipment.

Ease of Installation:

Standard M16/M18/M24 mounting threads ensure high compatibility with accessories.

The load-bearing blind hole design enables automatic centering, reducing installation and commissioning time.

青岛铨航机械设备有限公司
Qingdao Quanhang Machinery Co., Ltd

Specialized mounting brackets are available for specific models.

Operates over a wide temperature range; long-term stability and reliability

Operating Temperature: -30°C to +70°C (wide temperature range covering most industrial environments)

Temperature Compensation Range: -10°C to +40°C

Temperature Coefficient: ±0.02% FS/10°C (dual compensation for zero and sensitivity)

With 28 years of proven manufacturing expertise, Keli's sensors undergo rigorous aging screening and temperature cycling tests, ensuring an accuracy drift of <0.1% per year over a 10-year service life.

Applications

Platform Scales / Low-Profile Scales: Static weighing in factory workshops, warehouses, and logistics centers

Batching Control Systems: Automated batching and weighing in the chemical, food, feed, and building materials industries

Reactor Weighing / Tank Weighing: Weighing and monitoring of chemical reactors, liquid storage tanks, and silos

Hopper Scales / Funnel Scales: Batch measurement and process control for powders and granular materials

Packaging Machines / Filling Machines: Quantitative packaging control for food, pharmaceutical, and chemical products

Belt Scales / Conveyor Weighing: Dynamic flow measurement and totalization for belt conveyors

Other Industrial Weighing Applications: Floor scales, monorail scales, forklift scales, pallet scales, medical bed scales, wheelchair scales (medical-grade accuracy available), hook scales (capable of withstanding tension and compression)

Why Choose Us?

Expert Technical Team: Over 10 years of experience in R&D of mixing equipment, providing customized solutions

青岛铨航机械设备有限公司
Qingdao Quanhang Machinery Co., Ltd

Quality Assurance: Rigorous quality control system; ISO 9001-certified company

After-Sales Service: Global service network, 24-hour response, and lifetime technical support

Success Stories: Serving over 500 companies across more than 20 countries and regions

FAQ

1.

Q: What is the minimum order quantity for your products?

A: For larger equipment such as mixers, our minimum order quantity is one unit; for smaller products such as valves and fittings, the minimum order quantity ranges from 50 to 100 pieces. Please contact our sales representatives to confirm the specific minimum order quantity.

2.

Q: From which port do you ship?

A: Since our company is located in Qingdao, most of our shipments depart from the Port of Qingdao.

3.

Q: Are you a factory or a trading company?

A: We are a manufacturing company with our own factory; all our equipment is produced in our factory's production lines.

4.

Q: How should the sensor capacity be selected?

A: Select based on the actual maximum load, and it is recommended to apply a safety factor of 1.2 to 1.5 times:

General-purpose bench scales/platform scales: Select the actual maximum load × 1.5

Hopper scales/reactors: Select the rated capacity × the total number of sensors × 1.2

Batching systems: Select the maximum batch weight × 2 (to prevent shock overload)

Example: For a 2-metric-ton platform scale, you can select four 500-kg sensors (total capacity: 2 metric tons × 4 × 1.25 safety factor = 10 metric tons)

青岛铨航机械设备有限公司
Qingdao Quanhang Machinery Co., Ltd

5.

Q: How many load cells are needed? How can accuracy be ensured for multi-cell scales?

A: Principles for scale configuration:

Small bench scales (<500 kg): 1 load cell

Medium-sized platform scales (500 kg–5 t): 4 load cells (distributed at the four corners)

Large hopper scales/tanks: 3–4 load cells (evenly distributed)

Key factors for ensuring accuracy:

Select load cells from the same batch with consistent specifications (sensitivity deviation < 0.1%)

Installation surface levelness < 0.2 mm; height difference between load cells < 0.5 mm

Use a junction box for corner adjustments

Perform overall calibration using standard weights

6.

Q: What do the IP67 and IP68 protection ratings for sensors mean?

A: IP67: Completely dust-tight (6) + protection against brief immersion in water (7): Can be submerged in 1 m of water for 30 minutes

IP68: Completely dust-tight (6) + protection against prolonged immersion (8): Can be continuously submerged in water at a depth of 2 meters for 168 hours (7 days)

Practical Applications: IP68 models can be directly buried in the ground and are also suitable for outdoor environments exposed to rain and water jets.

7.

Q: How can I tell if the sensor is damaged?

A: Simple self-test steps (using a multimeter):

① Measure input impedance: Measure the resistance between the red and white wires; it should be approximately 400 ± 20 Ω. If the deviation is significant, the sensor is damaged.

② Measure output impedance: Measure the resistance between the green and black wires; it should be approximately 352 ± 3 Ω. If the deviation is significant, the sensor is damaged.

青岛铨航机械设备有限公司
Qingdao Quanhang Machinery Co., Ltd

③ Measure insulation resistance: Measure the resistance between the bridge circuit and the housing; it should be >5000 MΩ. This value may decrease in humid environments.

④ Measure zero-point output: When powered on with no load, the mV output should be close to 0. A deviation exceeding ±1% FS indicates a malfunction.

8.

Q: Can the sensor withstand tensile forces?

A: Yes. The sensor features a shear stress measurement design and can withstand both compressive and tensile loads. It is suitable for:

Hook scales (tensile force measurement);

Tension control systems;

Top-mounted installation on hopper scales (sensor under tensile load).

Note: Specify the direction of force when ordering. When used for tensile force measurement, select the dedicated mounting accessories for tensile applications.

9.

Q: How do I select the appropriate weighing indicator/transmitter?

A: Key selection criteria:

Input signal compatibility: The indicator should support mV/V input (excitation voltage 10–12 V DC)

Input impedance matching: The indicator's input impedance should be >100 times the sensor's output impedance (>35 kΩ)

Range Setting: Indicator range = sensor sensitivity × excitation voltage × sensor rated capacity

Accuracy Matching: The indicator's accuracy should be at least one grade higher than the sensor's accuracy

Example: For a 1-metric-ton sensor (sensitivity 3.0 mV/V) with a 10 V excitation voltage, the indicator range should be: 3.0 mV/V × 10 V = 30 mV, corresponding to 1 metric ton

10.

Q: Do you offer OEM/customization services? What is the minimum order quantity?

A: We offer the following customization services:

青岛铨航机械设备有限公司
Qingdao Quanhang Machinery Co., Ltd

Measurement Range Customization: Non-standard ranges are negotiable

Cable Length: Custom lengths from 1 to 20 meters

Connector Customization: Aviation connectors, loose wire ends, etc.

Labeling Customization: Private labeling, logo customization

Minimum Order Quantity: Standard products start at 1 unit; custom products start at 10 units.